THIRD ANGLE PROJECTION

DOCUMENT REVISIONS

REV	DESCRIPTION	CO NO.	DATE	CHG/CHK
1	INITIAL RELEASE	--	10/25/21	--

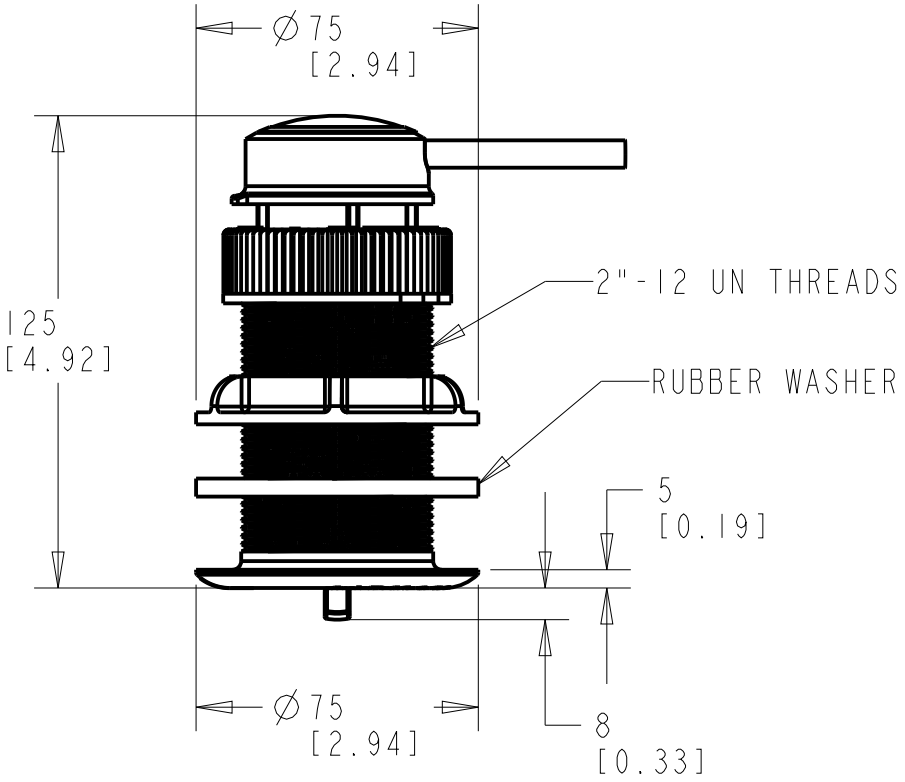

PART NUMBER	P/N REV
N/A	N/A

UNLESS OTHERWISE SPECIFIED	SIGNATURE	DATE
DIMENSIONS ARE IN MM [IN] TOLERANCES ON 1 PL DECIMALS: ±0.5 2 PL DECIMALS: ±0.125 ANGLES: ±1/2° FRACTIONS: ±1/16 SURFACE FINISH: ✓63	DRAWN: K.CHANCEY	09/07/21
	CHECKED: E.BEISWENGER	10/22/21

AIRMAR

AIRMAR TECHNOLOGY CORPORATION
35 MEADOWBROOK DR
MILFORD NH 03055-4613 USA
TEL: 603-673-9570 FAX: 603-673-4624

TITLE

OUTLINE DRAWING, IDST810, P617V

MATERIAL

HIGH IMPACT AND CHEMICAL RESISTANT PLASTIC

SIZE	SCALE: 1:2	DOC NUMBER	DOC REV
A	SHEET 1 OF 1	D-20265	1

THIS DOCUMENT AND THE DATA DISCLOSED HEREIN OR HEREWITH IS NOT TO BE REPRODUCED, USED, OR DISCLOSED IN WHOLE OR IN PART TO ANYONE WITHOUT THE PERMISSION OF AIRMAR.

CRITICAL DIMENSION (REF)

DO NOT SCALE DRAWING