THIRD ANGLE PROJECTION	DOCUMENT REVISIONS				
	REV	DESCRIPTION	CO NO.	DATE	CHG/CHK
	1	INITIAL RELEASE	--	09/28/20	FSC

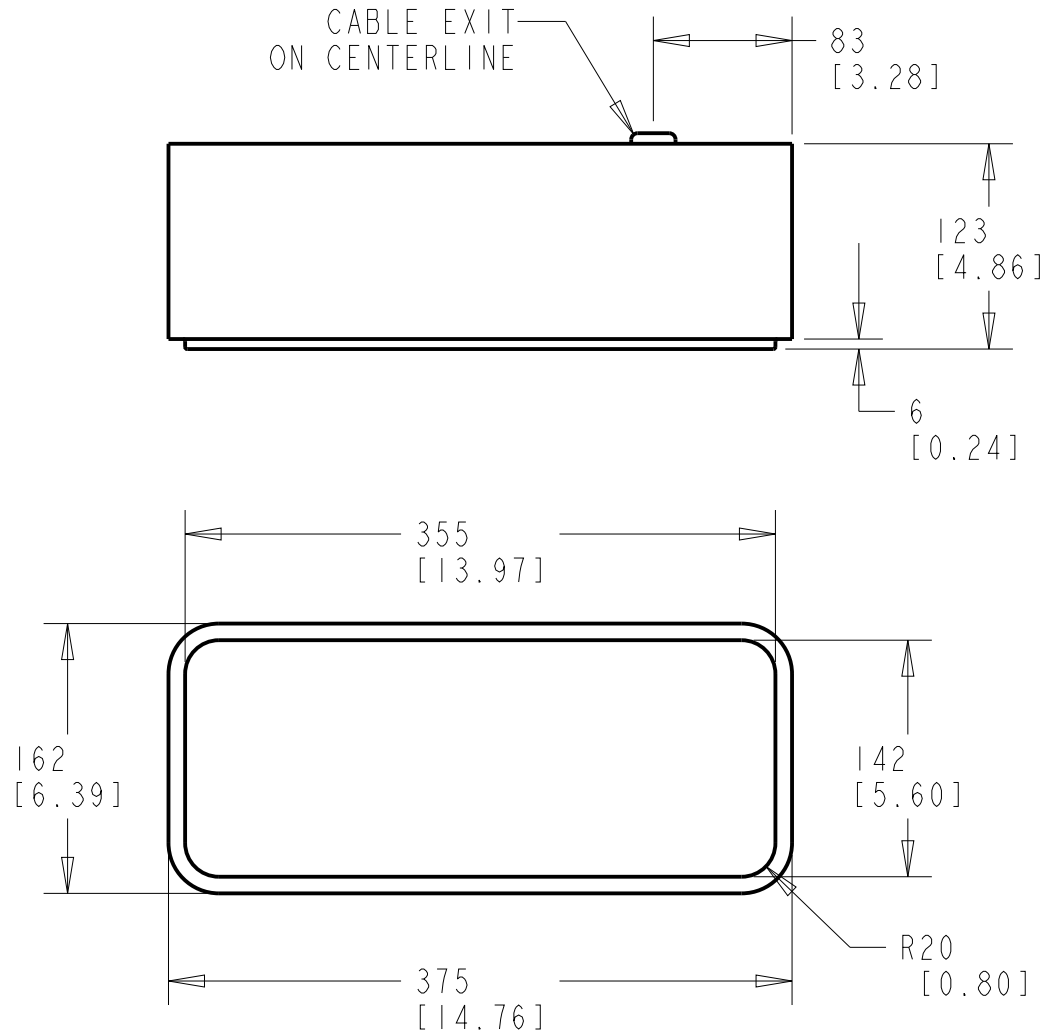

PART NUMBER	P/N REV
N/A	N/A

UNLESS OTHERWISE SPECIFIED	SIGNATURE	DATE
DIMENSIONS ARE IN MILLIMETERS TOLERANCES ON 0 PL DECIMALS: ±1 1 PL DECIMALS: ±0.5 ANGLES: ±1/2° FRACTIONS: ±1/16	DRAWN: F.CHASE	09/28/20
	CHECKED: A.BIATHROW	09/28/20

AIRMAR TECHNOLOGY CORPORATION
35 MEADOWBROOK DR
MILFORD NH 03055-4613 USA
TEL: 603-673-9570 FAX: 603-673-4624

TITLE

OUTLINE DRAWING CM510L

MATERIAL

N/A

SIZE	SCALE: NONE	DOC NUMBER	DOC REV
A	SHEET 1 OF 1	D-19590	1

THIS DOCUMENT AND THE DATA DISCLOSED HEREIN OR HEREWITH IS NOT TO BE REPRODUCED, USED, OR DISCLOSED IN WHOLE OR IN PART TO ANYONE WITHOUT THE PERMISSION OF AIRMAR.

CRITICAL DIMENSION (REF)

DO NOT SCALE DRAWING