THIRD ANGLE PROJECTION

DOCUMENT REVISIONS				
REV	DESCRIPTION	CO NO.	DATE	CHG/CHK
1	INITIAL RELEASE	--	--	--
2	CHANGE DEFAULT TOLERANCE 0 PL DECIMAL FROM ±2 TO ±1 MM	4854	02/19/24	RLE/LRS
3	CLARIFY HEIGHT DIM. FOR END USER [C7]	6488	03/20/26	RJB/EJB

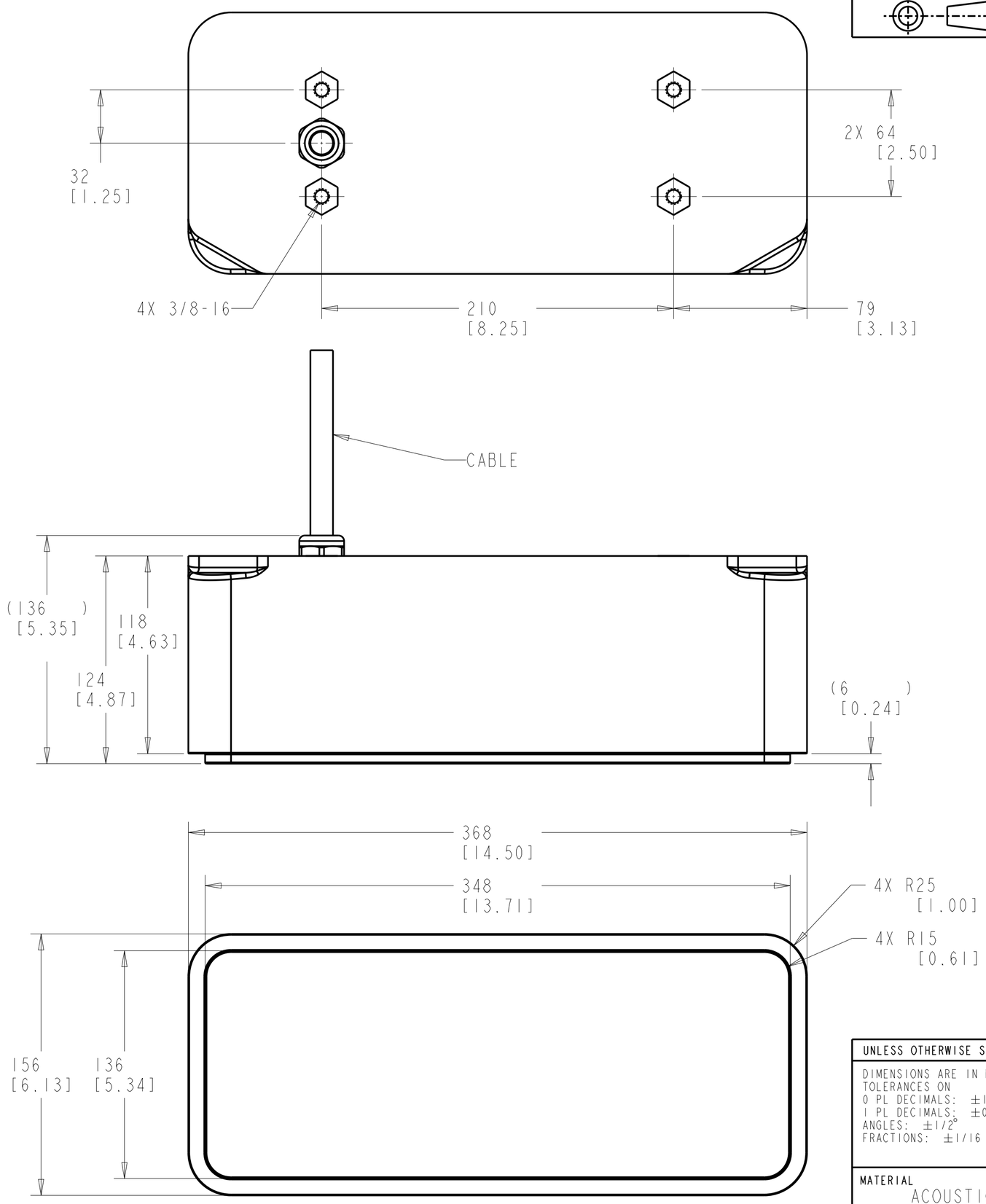

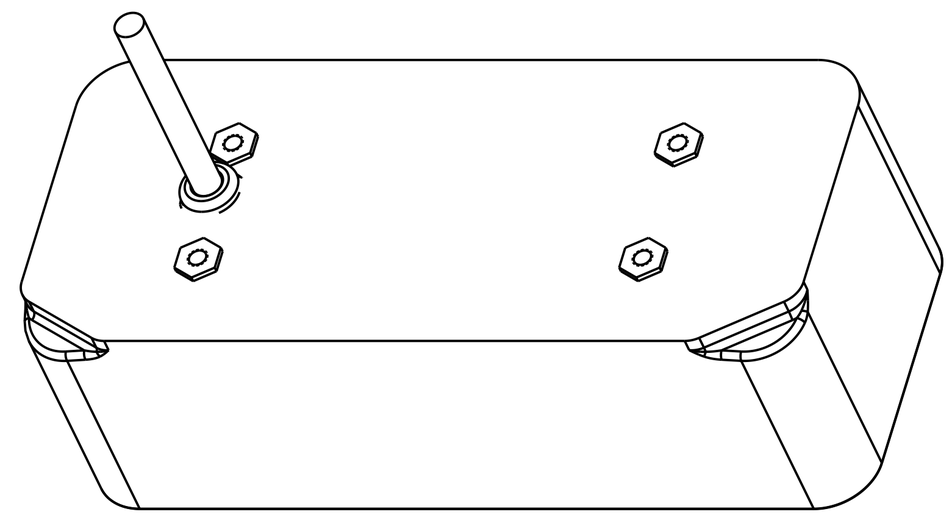

UNLESS OTHERWISE SPECIFIED	SIGNATURE	DATE
DIMENSIONS ARE IN MM [IN] TOLERANCES ON 0 PL DECIMALS: ±1 1 PL DECIMALS: ±0.5 ANGLES: ±1/2° FRACTIONS: ±1/16	DRAWN: D.SPALDING	06/04/18
	CHECKED: B.THOMPSON	11/06/19

MATERIAL
ACOUSTIC WINDOW, HOUSING: EPOXY

PART NUMBER: N/A
P/N REV:

AIRMAR

AIRMAR TECHNOLOGY CORPORATION
35 MEADOWBROOK DR.
MILFORD, NH 03055-4613 USA
TEL:603-673-9570 FAX: 603-673-4624

TITLE
OD CM599

SIZE: C
SCALE: 1/2
SHEET 1 OF 1
DOC NUMBER: D-18908
DOC REV: 3

THIS DOCUMENT AND THE DATA DISCLOSED HEREIN OR HEREWITH IS NOT TO BE REPRODUCED, USED, OR DISCLOSED IN WHOLE OR IN PART TO ANYONE WITHOUT THE PERMISSION OF AIRMAR.

CRITICAL DIMENSION (REF) DO NOT SCALE DRAWING