THIRD ANGLE PROJECTION	DOCUMENT REVISIONS			
	REV	DESCRIPTION	CO NO.	DATE	CHG/CHK
	01	RELEASE TO PRODUCTION.	10554	06/30/11	ALB/CDS
	2	REMOVE SPEED BARE WIRE FROM PIN 1. ADD DEPTH BARE WIRE TO TRANSDUCER END. UPDATE NOTE 1.	3344	06/01/22	RLE/WJL

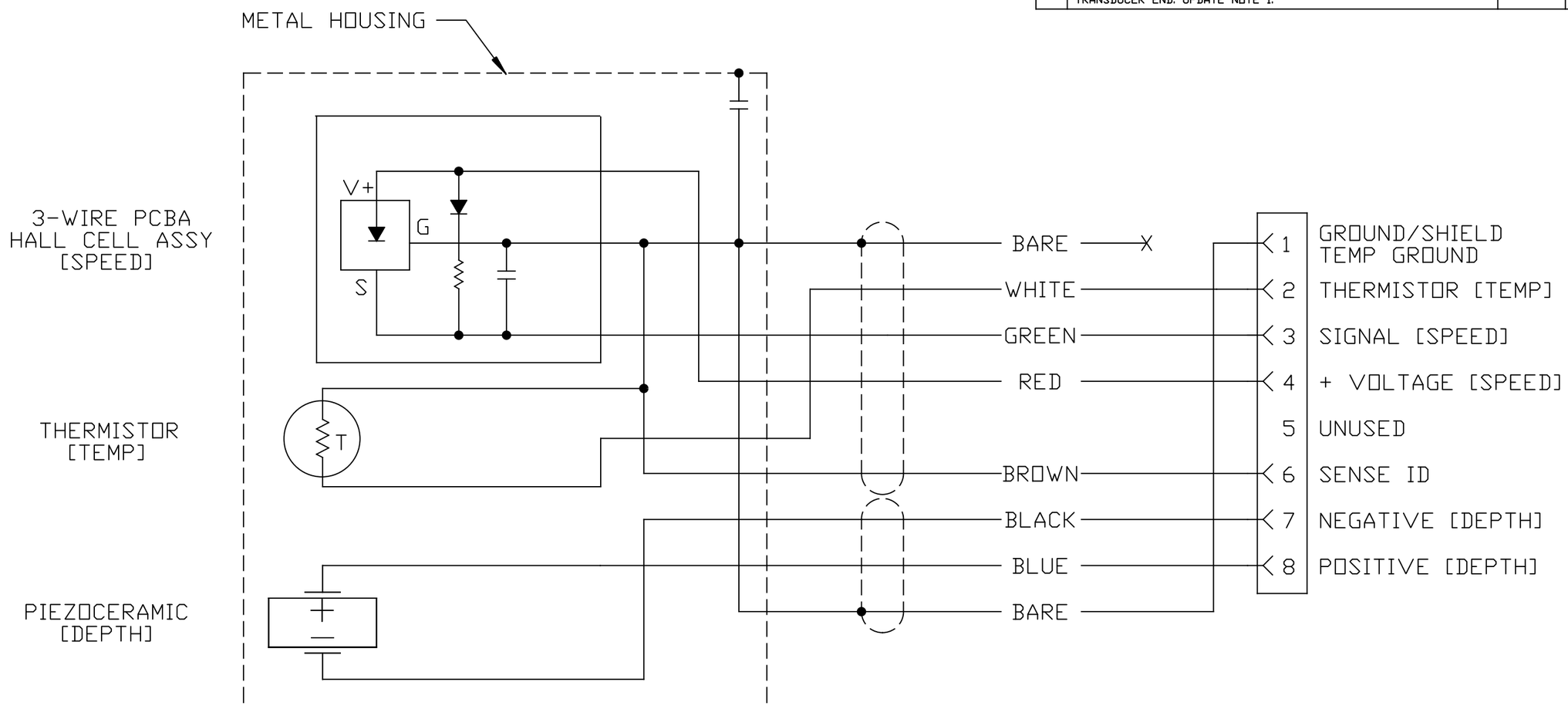

CONTACT END VIEW

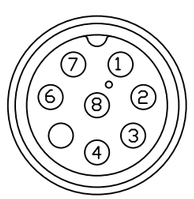

7/8 PIN FEMALE
GARMIN CONNECTOR

NOTES:

1. SPEED BARE WIRE IS CUT OFF AT CONNECTOR END.
2. ORANGE WIRE IS CUT OFF ON BOTH ENDS.

PART NUMBER	P/N REV
N/A	N/A

UNLESS OTHERWISE SPECIFIED	SIGNATURE		DATE
DIMENSIONS ARE IN INCHES TOLERANCES ON 2 PL DECIMALS ±0.02 3 PL DECIMALS ±0.005 ANGLES ± 1/2° FRACTIONS ± 1/32 SURFACE FINISH 63	ORGINATOR	J.JEFFERS	09/22/10
	DRAWN	A.BIATHROW	09/22/10
	CHECKED	J.JEFFERS	09/23/10
	APPROVED	F.BOERICKE	09/23/10

MATERIAL
CABLE 06-344
CONNECTOR 05-774-02

AIRMAR
AIRMAR TECHNOLOGY CORPORATION
35 MEADOWBROOK DR
MILFORD NH 03055-4613 USA
TEL: 603-673-9570 FAX: 603-673-4624

TITLE
WIRING, DST, C344, SENSE ID,
7/8F-G [B744VC & VLC]
GARMIN GSD24

SIZE	SCALE: NONE	DOC NUMBER	DOC REV
B	SHEET 1 OF 1	D-91-1045	2

THIS DOCUMENT AND THE DATA DISCLOSED HEREIN OR HEREWITH IS NOT TO BE REPRODUCED, USED, OR DISCLOSED IN WHOLE OR IN PART TO ANYONE WITHOUT THE PERMISSION OF AIRMAR

CRITICAL DIMENSIONS (REF) DO NOT SCALE DRAWING