THIRD ANGLE PROJECTION	DOCUMENT REVISIONS				
	REV	DESCRIPTION	CO NO.	DATE	CHG/CHK
	1	INITIAL RELEASE	—	02/17/25	RLE/WJL

NOTES:

1. WHITE WIRE IS CUT OFF ON BOTH ENDS.

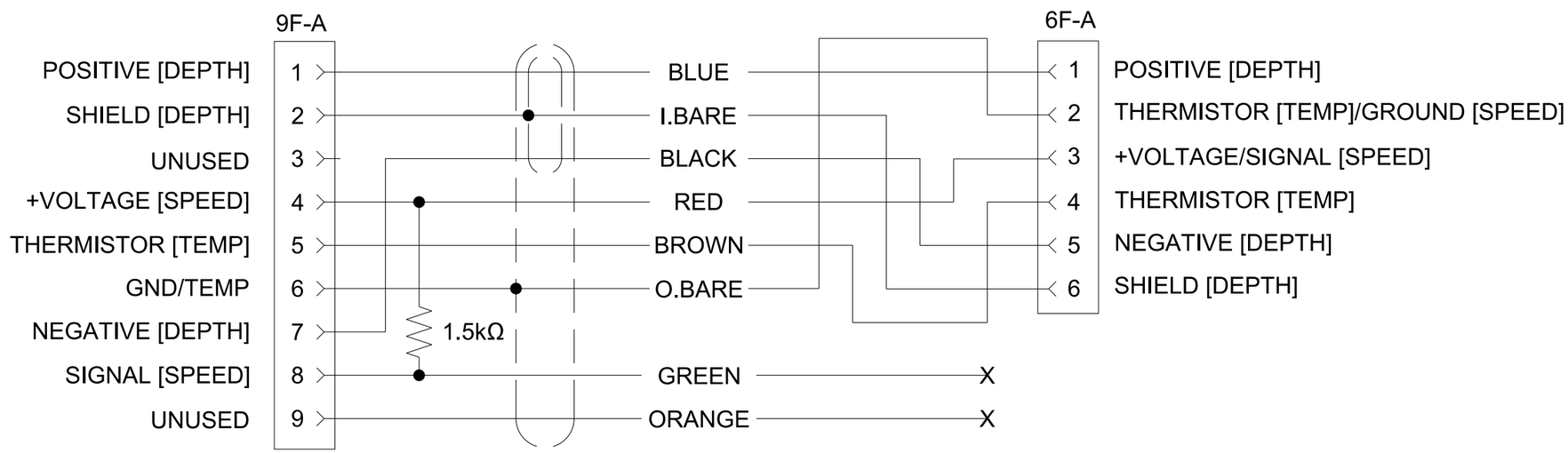

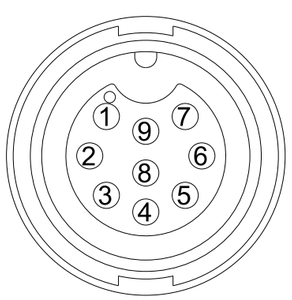

CONTACT END VIEW
9 PIN FEMALE

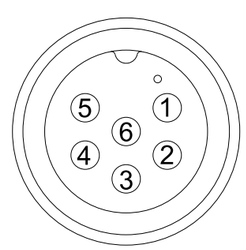

CONTACT END VIEW
6 PIN FEMALE

PART NUMBER	P/N REV
N/A	N/A

UNLESS OTHERWISE SPECIFIED	SIGNATURE	DATE
DIMENSIONS ARE IN INCHES TOLERANCES ON 2 PL DECIMALS: ±0.02 3 PL DECIMALS: ±0.005 ANGLES: ±1/2° FRACTIONS: ±1/16 SURFACE FINISH: ✓63	DRAWN: R.EVANS	12/02/24
	CHECKED: I.ROBB	01/24/25
	APPROVED: W.LETENDRE	01/27/25
MATERIAL AS NOTED		

AIRMAR
AIRMAR TECHNOLOGY CORPORATION
35 MEADOWBROOK DR
MILFORD NH 03055-4613 USA
TEL: 603-673-9570 FAX: 603-673-4624

TITLE

WIRING CBL ASSY C332 9F-A RES & 6F-A

SIZE	SCALE: NONE	DOC NUMBER	DOC REV
B	SHEET 1 OF 1	D-22610	1

THIS DOCUMENT AND THE DATA DISCLOSED HEREIN OR HEREWITH IS NOT TO BE REPRODUCED, USED, OR DISCLOSED IN WHOLE OR IN PART TO ANYONE WITHOUT THE PERMISSION OF AIRMAR

CRITICAL DIMENSIONS (REF) DO NOT SCALE DRAWING