THIRD ANGLE PROJECTION	DOCUMENT REVISIONS				
	REV	DESCRIPTION	CO NO.	DATE	CHG/CHK
	1	INITIAL RELEASE	----	02/14/22	---/---

NOTES:

1. INNER BARE, GREEN AND ORANGE WIRES ARE CUT OFF AT BOTH ENDS

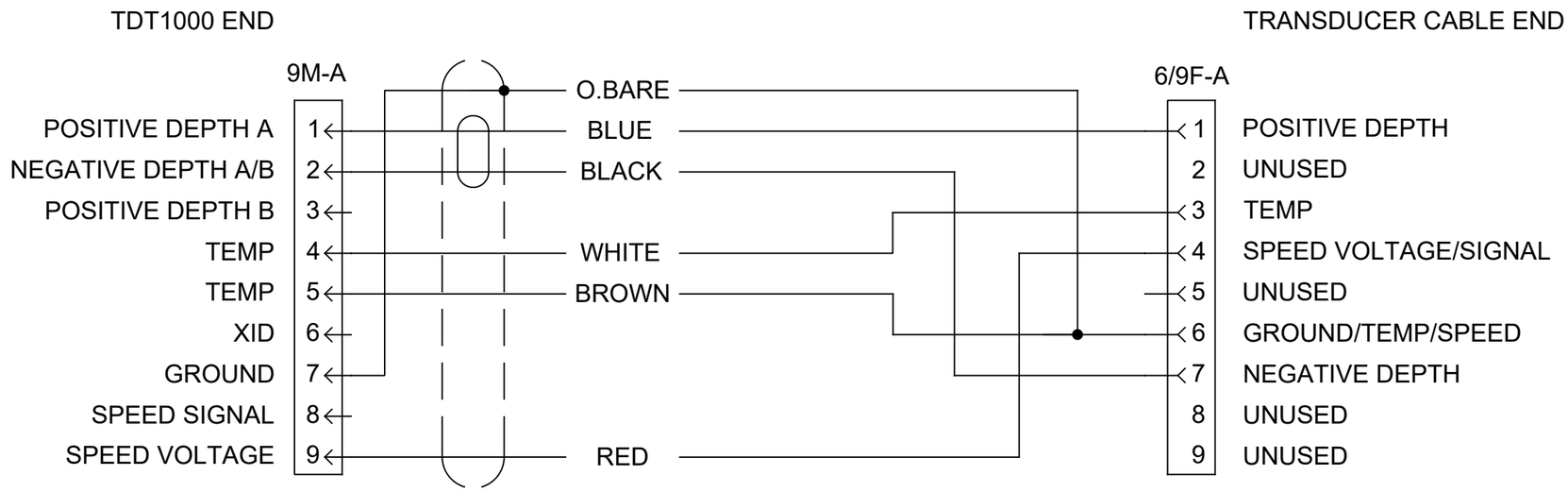

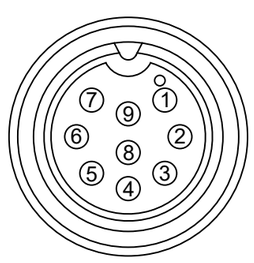

CONTACT END VIEW
9 PIN MALE

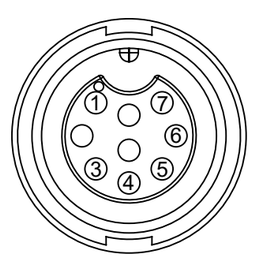

CONTACT END VIEW
6/9 PIN FEMALE

PART NUMBER	P/N REV
33-1330-01	N/A

UNLESS OTHERWISE SPECIFIED	SIGNATURE	DATE
DIMENSIONS ARE IN INCHES TOLERANCES ON 2 PL DECIMALS: ±0.02 3 PL DECIMALS: ±0.005 ANGLES: ±1/2° FRACTIONS: ±1/16 SURFACE FINISH: ✓63	DRAWN: R.EVANS	08/25/21
	CHECKED: I.ROBB	02/14/22
MATERIAL		
AS NOTED		

AIRMAR

AIRMAR TECHNOLOGY CORPORATION
35 MEADOWBROOK DR
MILFORD NH 03055-4613 USA
TEL: 603-673-9570 FAX: 603-673-4624

TITLE

WIRING, ADPTR CBL TDT1000
C332 9M-A & 6/9F-A RAYMARINE

SIZE	SCALE: NONE	DOC NUMBER	DOC REV
B	SHEET 1 OF 1	D-20233	1

THIS DOCUMENT AND THE DATA DISCLOSED HEREIN OR HEREWITH IS NOT TO BE REPRODUCED, USED, OR DISCLOSED IN WHOLE OR IN PART TO ANYONE WITHOUT THE PERMISSION OF AIRMAR

CRITICAL DIMENSIONS (REF) DO NOT SCALE DRAWING